MALE END VIEW

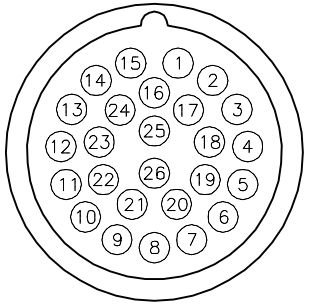

1 = BROWN
2 = WHITE/GREY
3 = BLUE/GREY
4 = BROWN/GREY
5 = BLACK/YELLOW
6 = WHITE/YELLOW
7 = BLUE/YELLOW
8 = BROWN/YELLOW
9 = BLACK/RED
10 = WHITE/RED
11 = BLUE/RED
12 = BROWN/RED
13 = BLACK
14 = WHITE
15 = BLUE
16 = BLACK/GREY
17 = BROWN/ORANGE
18 = WHITE/ORANGE
19 = BLACK/ORANGE
20 = BLACK/GREEN
21 = WHITE/GREEN
22 = BLUE/GREEN
23 = BROWN/GREEN
24 = BLUE/ORANGE
25 = GREEN/YELLOW
26 = N/C

DRAIN/SHIELD

FEMALE END VIEW

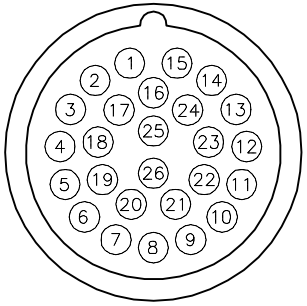

SPECIFICATIONS

CONTACT CARRIER MATERIAL	NYLON or PBT
CONTACT MATERIAL/PLATING	BRASS/GOLD
COUPLING NUT MATERIAL/PLATING	BRASS/NICKEL
MOLDED HEAD MATERIAL/COLOR	TPU/BLACK
RATED CURRENT [A]	3.0 A
RATED VOLTAGE [V]	150 V
OUTER JACKET MATERIAL/COLOR	PVC/YELLOW
CONDUCTOR INSULATION MATERIAL	PVC
NUMBER OF CONDUCTORS [AWG]	25x22 AWG
DRAIN/SHIELD	22 AWG/ALUM.-POLYESTER FOIL
PROTECTION CLASS	IEC IP67
TEMPERATURE	-40°C TO +105°C (-40°F TO +221°F)

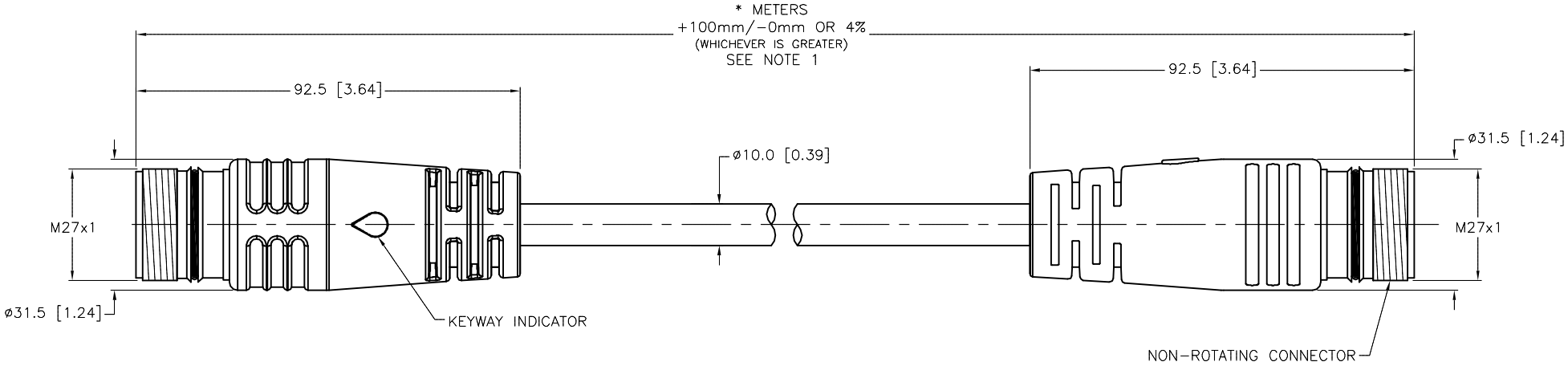

SOURCE DRAWING - FOR REFERENCE ONLY

NOTES:

1. "*" INDICATES CABLE LENGTH IN METERS. CONTACT TURCK TO ORDER SPECIFIC LENGTHS.

REV	DESCRIPTION	BY	DATE	ECO NO.
A	DRAWING RELEASE	TV	08/12/16	

RELATED DOCUMENTS
1.
2.
3.
4.

3RD ANGLE PROJECTION

THIS DRAWING IS CONFIDENTIAL AND THE PROPERTY OF TURCK INC. USE OF THIS DOCUMENT WITHOUT WRITTEN PERMISSION IS PROHIBITED.

TURCK

3000 CAMPUS DRIVE
MINNEAPOLIS, MN 55441
1-800-544-7769
(763) 553-7300
(763) 553-0708 fax
www.turck.us

MATERIAL: SEE SPECIFICATIONS

FINISH: SEE SPECIFICATIONS

ALL DIMENSIONS DISPLAYED ON THIS DRAWING ARE FOR REFERENCE ONLY

CONTACT TURCK FOR MORE INFORMATION

DRFT: TV | DATE: 07/27/16
APVD: L.H. | SCALE: 1=1.5

UNIT OF MEASUREMENT
MILLIMETER [INCH]
DO NOT SCALE THIS DRAWING

DESCRIPTION: DSSM DXM 26-631-*

IDENTIFICATION NO.

REV: A

FILE: 777037932

SHEET 1 OF 1

Approved 07/27/2016, work order #111255 by L.H.